Acta Chemica Scandinavica, 1997: 51: 1134–1137
Printed in UK – all rights reserved

Copyright © Acta Chemica Scandinavica 1997

ACTA
CHEMICA SCANDINAVICA
ISSN 0904–213X

Short Communication

A Facile Formation of the Tricyclo[3.3.0.0^{2,4}]octane Ring System

Yngve Stenstrøm,[a,*] Christian Rømming[b] and Lars Skattebøl[b]

[a]Agricultural University of Norway, Department of Biotechnological Sciences, P.O.B. 5040, N-1432 Ås, Norway and [b]Department of Chemistry, University of Oslo, P.O.B. 1033 Blindern, N-0315 Oslo, Norway

Stenstrøm, Y., Rømming, C. and Skattebøl, L., 1997. A Facile Formation of the Tricyclo[3.3.0.0^{2,4}]octane Ring System. – Acta Chem. Scand. 51: 1134–1137. © Acta Chemica Scandinavica 1997.

The methylenecyclobutane derivative **1** is an intermediate in our synthesis of the pheromone component lineatin, and is readily available from the allene-ene **2** by thermally induced intramolecular cycloaddition.[1] During the course of this work we encountered an acid-catalysed ring expansion of the epoxide **3** to the bicyclo[3.3.0]octane derivatives **4** and **5** (Scheme 1). Since this ring system is present in a number of natural products we thought it interesting to study further this rearrangement.[2]

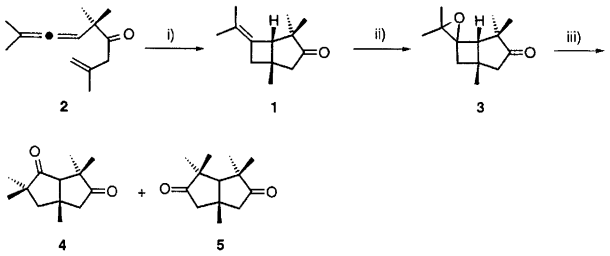

Scheme 1. (i) Δ; (ii) mCPBA; (iii) H^+.

When compound **1** was treated with Lewis acids such as BF_3, $AlCl_3$, $HgSO_4$, $Hg(OAc)_2$ or $AgNO_3$, either no reaction was observed or, at elevated temperatures, complex mixtures or tars resulted; in some cases the bicyclo[3.3.0]octene derivative **6** was identified as a minor product according to the ^{1}H NMR spectrum and comparison with authentic material (*vide infra*). Treatment of **1** with any of several proton acids, i.e. HCl, *p*-toluenesulfonic acid and CF_3CO_2H, resulted in complex mixtures as well (Scheme 2). Based on the ^{1}H NMR spectra of the crude products, compound **6** was identified as a component of these mixtures. Two doublets at 5.30 and 5.57 ppm, respectively, and with $J = 4$ Hz in the ^{1}H NMR spectra indicated the presence of another olefin which we believe is the isomeric structure **7**, in analogy with the results obtained from rearrangment of the epoxide **3** (Scheme 1). In the case of $AlCl_3$ a compound corresponding to the bicyclo[3.3.0]octane derivative **8** (*vide infra*), with bromine replaced by chlorine, was present as a minor component of the mixture.

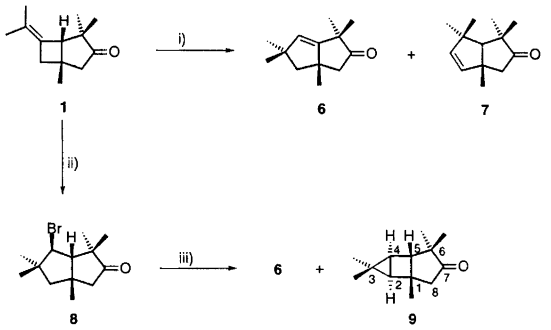

Scheme 2. (i) H^+ or Lewis acid; (ii) 45% HBr in HOAc, 50–60 °C, 6 h; (iii) base (see Table 1).

However, when **1** was treated with HBr in acetic acid at 50–60 °C for 6 h, a 95% isolated yield of a single compound, **8**, was obtained. At room temperature, 7 days were needed for complete conversion. Regarding the configuration of the carbon bearing the bromine atom information from the ^{1}H NMR spectrum was inconclusive; according to the Karplus rules, the coupling constant of $J_{5,6} = 11.2$ Hz observed for the α-proton is consistent with a dihedral angle of either 0 or 180°. The latter cannot be achieved according to models, but an angle of 160° is quite conceivable when the bromine and the bridgehead methyl group are *cis* related. On the other hand an angle of 0° would demand the bromine to be *trans*. The configuration was eventually established as **8** by X-ray diffraction (Fig. 1). The stereoselectivity may simply result from addition of bromide ion to the least hindered side of the rearranged carbocation.

* To whom correspondence should be addressed.

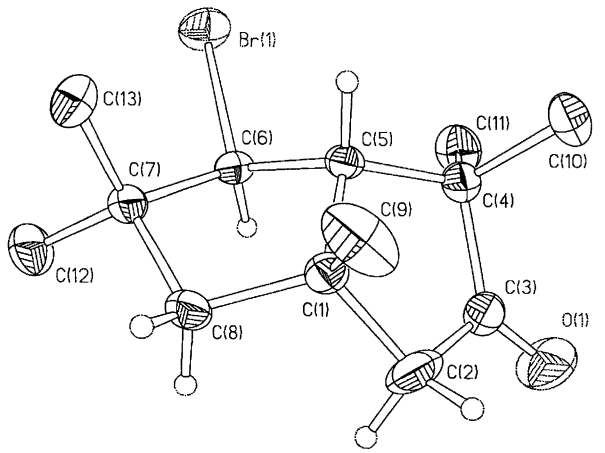

Fig. 1. ORTEP plot of **8**. Methyl hydrogen atons are removed for clarity.

Treatment of **8** with an excess of 1,8-diazabicyclo-[5.4.0]undec-7-ene (DBU) at 210–215 °C gave a 4:1 mixture of two compounds, which were separated by preparative GLC. The major component was identified as the expected olefin **6** based on the NMR spectra, while the minor component **9** was shown to be an isomer. The five different methyl groups appear as singlets in the ^{1}H NMR spectrum and the methylene protons α to the carbonyl group appear as two doublets. The protons on the four-membered ring give rise to an ABC system consisting of one singlet and two doublets. The apparent lack of coupling between H4 and H5 must be due to an unfavourable dihedral angle, which is in accordance with an *anti* arrangement of the three rings. The ^{13}C NMR spectrum confirms the structure and in particular the multiplicities of the carbon atoms.

Several bases were tried, and the results are summarised in Table 1. Reactions with nitrogen bases required several hours at high temperature for completion, DBU being the most reactive. Essentially the same ratios of **6** and **9** were obtained, and even the reaction without base gave these two isomers in the same ratio accompanied by considerable tar formation. The rather vigorous conditions necessary for elimination of hydrogen bromide from **8** is not surprising in view of the considerably strained, antiperiplanar transition state for γ-elimination to the tricyclic compound **9** and the unfavourable *syn* β-elimination required for formation of compound **6**. Interestingly, however, the use of sodium ethoxide in ethanol at considerably lower temperature afforded **6** and **9** in a ratio of 1:5, and potassium *tert*-butoxide in *tert*-butyl alcohol at the same relatively low temperature yielded **9** as the only product in practically quantitative yield.

Several examples of the tricyclo[3.3.0.0^{2,4}]octane ring assembly are known from the literature,[3] but they are usually prepared by methods other than base-induced hydrogen bromide elimination.

Experimental

General. The NMR spectra were recorded on a Varian XL-300 instrument. Me_4Si was used as the internal standard and $CDCl_3$ as the solvent for running both the ^{1}H NMR and ^{13}C NMR spectra. Analytical GLC was performed on a 25 m SP2100 capillary column while preparative GLC was performed on a 10% SP2100 packed column. The starting material 6-isopropylidene-1,4,4-trimethylbicyclo[3.2.0]heptan-3-one (**1**) was made according to the literature.[1]

6-Bromo-1,4,4,7,7-pentamethylbicyclo[3.3.0]octan-3-one (**8**). A solution of 5.02 g (26.0 mmol) **1** in 25 ml 45% HBr in acetic acid was heated to 50–60 °C while monitoring the reaction on GLC. After ca. 6 h all starting material had been converted into mainly one product. Less than 3% of a compound with nearly the same retention time as **8** was formed according to GLC. The mixture was cooled and 50 ml ether and 25 ml water were added. The organic phase was washed with water (25 ml), saturated $NaHCO_3$ (25 ml) and brine (20 ml). Drying ($MgSO_4$), evaporation and distillation (b.p. 94–96 °C/0.08 mmHg) gave 6.75 g of an oil which crystallised upon standing [m.p. 55–56 °C (pentane)]. MS [*m/z* (% rel. int.), CI (NH_3)]: 274, 272 (8, M^+). IR (CCl_4): 1742 (s) cm^{-1}. ^{1}H NMR (300 MHz): δ 1.05, 1.16, 1.21, 1.25, 1.35 (s, 5 × CH_3), 1.58 (d, *J* 13.6 Hz, 1 H), 1.91 (d, *J* 13.6 Hz, 1 H), 2.28 (d, *J* 18.1 Hz, 1 H), 2.38 (d, *J* 18.1 Hz, 1 H), 2.51, (d, *J* 11.2 Hz, 1 H), 3.71 (d, *J* 11.2 Hz, 1 H). ^{13}C NMR (75 MHz): δ 20.85, 25. 11, 27.42, 28.14, 31.89 (5 × CH_3), 40.50 (C), 43.50 (C), 47.70 (C), 53.21 (CH_2), 53.66 (CH_2), 64,25 (CH), 64.99 (CH), 221.71 (CO).

1,4,4,7,7-Pentamethylbicyclo[3.3.0]oct-5-en-3-one (**6**) *and 1,3,3,6,6-pentamethyltricyclo[3.3.0.0^{2,4}]octan-7-one* (**9**) were formed by heating a mixture of 348 mg (1.27 mmol) **2** and 1.710 mg (11.25 mmol) DBU at 210–215 °C for ca. 5 h. Ether (30 ml) was added and the

Table 1. Reactions of bromide **8** with base.

Base	*T*(bath)/°C	Reaction-time/h	Conversion (%)	Crude yield (%)	Ratio **6**:**9**
DBU	210–215	4	100	95	4:1
Bu_3N	210–215	70	80	—	4:1
Quinoline	210–215	12	100	—	3:1
Neat	210–215	4.5	55	—	4:1
EtONa	80–90	6	100	—	1:5
t-BuOK	80–90	5	100	100	0:100

solution was washed with 2 M HCl (2 × 20 ml), saturated $NaHCO_3$ (20 ml) and brine (10 ml). Drying ($MgSO_4$) and evaporation gave a mixture of **6** and **9** in a 20:80 ratio according to GLC. The two compounds could be separated by preparative GLC. The crude yield was 243 mg (100%).

6: MS [*m/z* (% rel. int.)]: 192 (5, M^+), 177 (22), 149 (100), 121, (44), 107 (67), 93 (32), 91 (29), 77 (21), 55 (25), 53 (23). IR (film): 3015 (m), 1750 (s), 1665 (m) cm^{-1}. ^1H NMR (300 MHz): δ 1.11, 1.13, 1.21, 1.22, 1.28 (s, 5 × CH_3), 1.77 (d *J* 12.8 Hz, 1 H), 1.88 (d, *J* 12.8 Hz, 1 H), 2.18 (d, *J* 16.9 Hz, 1 H), 2.39 (d, *J* 16.9 Hz, 1 H), 5.31 (s, 1 H). ^{13}C NMR (75 MHz): δ 25.18, 25.81, 28.52, 29.29, 31.23 (5 × CH_3), 44,87 (C), 46.86 (C), 50.16 (C), 55.33 (CH_2), 55.57 (CH_2), 130.84 (CH), 156.11 (C), 223.23 (CO).

9: MS [*m/z* (% rel. int.)]: 192 (7, M^+), 177 (24), 164 (28), 149 (100), 121 (53), 107 (79), 93 (32), 91 (35)79 (22), 55 (23). IR (film): 1755 (s) cm^{-1}. ^1H NMR (300 MHz): δ 1.05 (s, CH_3), 1.07 (s, CH_3), 1.14 (s, 2 × CH_3) 1.20 (s, CH_3), 1.53 (d, *J* 11.7 Hz, 1 H), 1.72 (d, *J* 11.7 Hz, 1 H), 2.28 (d, *J* 8.0 Hz, 1 H), 2.31 (s, 1 H), 2.65 (d, *J* 8.0 Hz, 1 H). ^{13}C NMR (75 MHz): δ 18.15, 21.39, 24.00, 26.02, 27.52 (5 × CH_3), 36.20 (C), 43.59 (C), 49.69 (CH_2), 59.21 (CH), 60.12 (C), 62.59 (CH), 68.50 (CH), 220.19 (CO).

1,3,3,6,6-Pentamethyltricyclo[3.3.0.0^{2,4}]octan-7-one (**9**). A solution of 308 mg (1.13 mmol) **8** and 181 mg (1.61 mmol) *t*-BuOK in 3.62 g *tert*-butyl alcohol was heated to 80–90 °C and monitored by GLC. After ca. 5 h the reaction was complete. Cold ether (20 ml) and water (10 ml) were added. The ether phase was washed with water (10 ml), dried ($MgSO_4$) and evaporated to give an oil which was found to be pure **9**. Yield: 216 mg (100%).

X-Ray Crystallography. X-Ray data were collected on a Siemens SMART CCD diffractometer[4] using graphite monochromated Mo Kα radiation. Data collection method: scan range, 0.6; crystal to detector distance, 5 cm; further information is given in Table 2. Data reduction and cell determination were carried out with the SAINT and XPREP programs.[4] Absorption corrections were applied by the use of the SADABS program.[5]

The structure was determined and refined using the SHELXTL program package.[6] The non-hydrogen atoms were refined with anisotropic thermal parameters; hydrogen positions were calculated from geometrical criteria and given isotropic thermal parameters. Final figures of merit are included in Table 2. Positional and equivalent isotropic thermal parameters for non-hydrogen atoms are listed in Table 3. Structure factors, lists of thermal parameters, hydrogen parameters, and a complete list of bond lengths, bond angles and torsion angles may be obtained from C.R. upon request.

Table 2. Crystal data and structure refinement for **8**.

Empirical formula	$C_{13}H_{21}BrO$
Formula weight	273.21
Temperature	150(2) K
Wavelength	0.71073 Å
Crystal system	Monoclinic
Space group	*P*21/*c*
Unit cell dimensions	*a* = 12.3752(4) Å
	b = 14.4445(4) Å
	c = 15.3662(5) Å
	β = 106.15(1)°
Volume, *Z*	2638.3(1) Å^3, 8
Density (calculated)	1.376 Mg m^{-3}
Absorption coefficient	3.091 mm^{-1}
F(000)	1136
Crystal size	0.3 × 0.3 × 0.15 mm
θ-range for data collection	1.97 to 40.22°
Limiting indices	$-20 \leqslant h \leqslant 22$, $-25 \leqslant k \leqslant 25$, $-21 \leqslant l \leqslant 27$
Reflections collected	38863
Independent reflections	15421 [*R*(int) = 0.0367]
Refinement method	Full-matrix least-squares on F^2
Data/restraints/parameters	15421/0/271
Goodness-of-fit on F^2	1.023
Final *R* indices [$I > 2\sigma(I)$]	*R*1 = 0.0549, *wR*2 = 0.0877
R indices (all data)	*R*1 = 0.1107, *wR*2 = 0.1028
Largest diff. peak and hole	1.194 and −0.849 e A^{-3}

Table 3. Atomic coordinates (× 10^4) and equivalent isotropic displacement parameters (Å^2 × 10^3) for **8**. *U*(eq) is defined as one third of the trace of the orthogonalized U_{ij} tensor.

	x	*y*	*z*	*U*(eq)
Br(1)	−1(1)	7886(1)	2100(1)	32(1)
O(1)	4245(1)	7642(1)	4791(1)	50(1)
C(1)	1691(1)	6289(1)	4386(1)	22(1)
C(2)	2974(2)	6382(2)	4752(2)	45(1)
C(3)	3292(2)	7363(1)	4625(1)	29(1)
C(4)	2235(1)	7962(1)	4270(1)	24(1)
C(5)	1287(1)	7247(1)	3904(1)	19(1)
C(6)	1010(1)	6992(1)	2899(1)	20(1)
C(7)	520(1)	6008(1)	2798(1)	22(1)
C(8)	1349(2)	5550(1)	3628(1)	28(1)
C(9)	1158(3)	6084(2)	5155(2)	47(1)
C(10)	2052(2)	8466(2)	5105(1)	36(1)
C(11)	2426(2)	8689(1)	3601(1)	34(1)
C(12)	570(2)	5554(1)	1913(1)	34(1)
C(13)	−683(2)	5963(1)	2879(1)	29(1)
Br(21)	2278(1)	3584(1)	5054(1)	30(1)
O(21)	6489(1)	3163(1)	7537(1)	52(1)
C(21)	3901(1)	1890(1)	7279(1)	22(1)
C(22)	5185(2)	1970(2)	7694(2)	39(1)
C(23)	5533(1)	2918(2)	7479(1)	31(1)
C(24)	4504(1)	3552(1)	7194(1)	26(1)
C(25)	3529(1)	2865(1)	6821(1)	18(1)
C(26)	3251(1)	2643(1)	5810(1)	18(1)
C(27)	2737(1)	1670(1)	5678(1)	23(1)
C(28)	3569(2)	1188(1)	6484(1)	27(1)
C(29)	3325(2)	1661(1)	8017(1)	34(1)
C(30)	4397(2)	3988(2)	8084(1)	36(1)
C(31)	4665(2)	4322(2)	6562(2)	42(1)
C(32)	2770(2)	1255(1)	4773(1)	35(1)
C(33)	1526(2)	1640(2)	5752(1)	33(1)

References

1. Skattebøl, L. and Stenstrøm, Y. *Acta Chem. Scand., Ser. B 39* (1985) 291.
2. (a) Paquette, L. A. *Top. Curr. Chem. 119* (1984) 1; (b) Gupta, A. K., Fu, X., Snyder, J. P. and Cook, J. M. *Tetrahedron 47* (1991) 3665, and references therein.
3. (a) Miesch, M., Miesch-Gross, L. and Franck-Neumann, M. *Tetrahedron 53* (1997) 2103; (b) Miesch, M., Miesch-Gross, L. and Franck-Neumann, M. *Tetrahedron 53* (1997) 2111; (c) Franck-Neumann, M., Miesch, M. and Lacroix, E. *Tetrahedron Lett. 30* (1989) 3533; (d) Franck-Neumann, M., Miesch, M. and Lacroix, E. *Tetrahedron Lett. 30* (1989) 3529; (e) Franck-Neumann, M., Miesch, M. and Barth, F. *Tetrahedron Lett. 30* (1989) 3537; (f) Misslitz, U., Primke, H. and de Meijere, A. *Chem. Ber. 122* (1989) 537; (g) Salinaro, R. F. and Berson, J. A. *Tetrahedron Lett. 23* (1982) 1451.
4. SMART and SAINT Area-detector Control and Integration Software, Siemens Analytical X-ray Instruments Inc., Madison, Wisconsin, USA.
5. Sheldrick, G. M. (1996) *Personal communication.*
6. Sheldrick, G. M. SHELXTL, Version 5. Siemens Analytical X-ray Instruments Inc., Madison, Wisconsin, USA.

Received April 17, 1997.